D1RFRD006

REVISION RECORD				
REV	ECO	DESCRIPTION	DRFT	CHKD
1		DRAWING MODIFY	HAOQIN 6/14/'05	

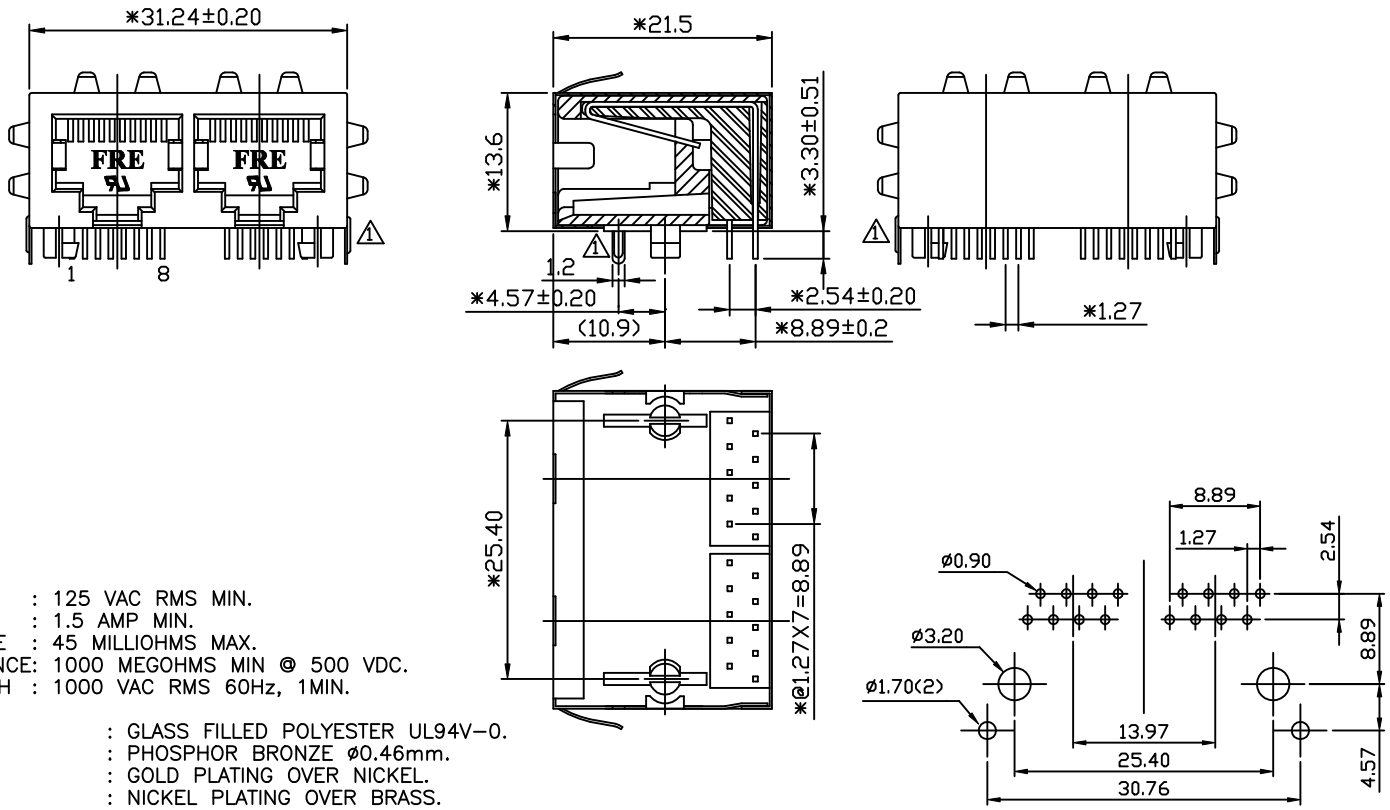

NOTES:

ELECTRICAL:

1. VOLTAGE RATING : 125 VAC RMS MIN.
2. CURRENT RATING : 1.5 AMP MIN.
3. CONTACT RESISTANCE : 45 MILLIOHMS MAX.
4. INSULATION RESISTANCE: 1000 MEGOHMS MIN @ 500 VDC.
5. DIELECTRIC STRENGTH : 1000 VAC RMS 60Hz, 1MIN.

MECHANICAL:

1. HOUSING MATERIAL : GLASS FILLED POLYESTER UL94V-0.
2. CONTACT MATERIAL : PHOSPHOR BRONZE ø0.46mm.
3. CONTACT PLATING : GOLD PLATING OVER NICKEL.
4. SHIELD PLATING : NICKEL PLATING OVER BRASS.
5. OPERATING LIFE : 750 CYCLES MIN.
6. PCB RETENTION PRE-SOLDER : 1 LB MIN.
7. PCB RETENTION POST-SOLDER: 10 LBS MIN.

ENVIRONMENTAL:

1. STORAGE : -40°C TO +85°C.
2. OPERATION: 0°C TO 70°C.

MATES WITH MODULAR PLUG CONFORMING TO FCC PART 68, SUBPART F.

CUL FILE NO. E163191

PART NUMBER: E5908-L5A12XD

1-3u" 2-6u"
3-15u" 4-30u"
5-50u" F-GOLD FLASH

MM (INCH)	DFTD Qianpu	DATE 3/25/'98	FULL RISE ELECTRONIC CO., LTD
TOLERANCES EXCEPT AS NOTED	CHKD SAMMY	DATE 2005/06/15	
MM .0 ± 0.2 ± .00 ± 0.15 ± .000 ± 0.075 ±	MFD	DATE	TITLE 20.57 PCB JACK 10P
	APPVL LUSHENG	DATE 2005/06/15	
ANGLES ± 0.01°	MATERIAL :		
	QT'Y :		DRAWING NO. GE593250 SIZE A3 REV 1
	FINISH:		/PART NO. SEE NOTE
THIRD ANGLE PROJECTION	SCALE : 2:1		DO NOT SCALE DRAWING SHEET X OF Y

DETACHED LISTS